ISSUE	DATE	AMENDMENTS
1	20/8/08	ORIGINAL
2	22/02/11	DOCUMENT NO. AND TITLE CORRECTED - WDA
3	31/08/11	START CAP AND RELAY ADDED - WDA

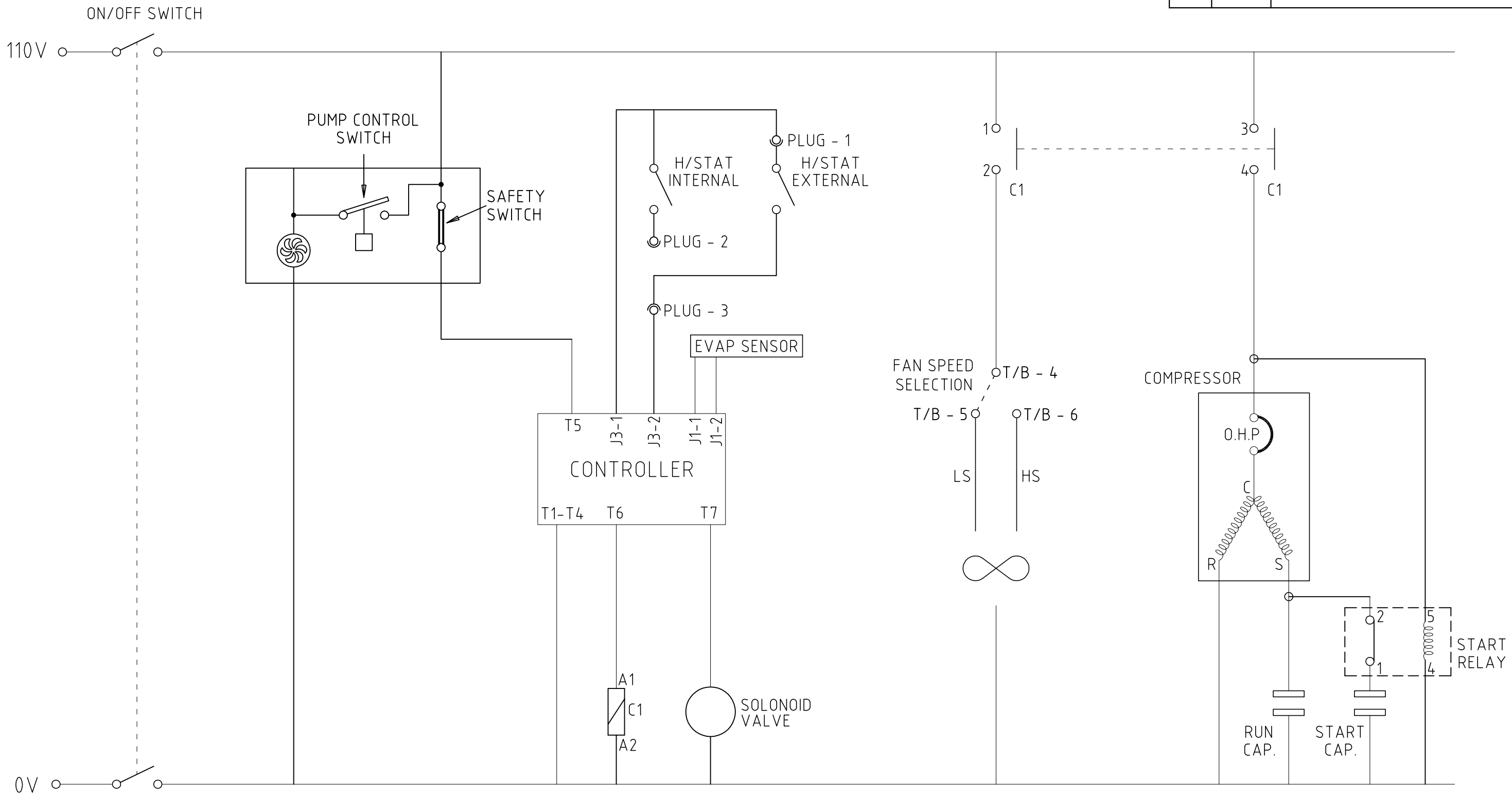

© 1993

Ebac LIMITED BISHOP AUCKLAND ENGLAND

TITLE: CD200 WIRING SCHEMATIC

3RD ANGLE PROJECTION

DO NOT SCALE IF IN DOUBT ASK

DIMENSIONS IN m.m.
TOLERANCES UNLESS OTHERWISE STATED
0. ± 1
0.0 ± 0.25
0.00 ± 0.05
ANGULAR ± 0.5 DEGREE

MATERIAL: N/A

FINISH: N/A

DRAWN: W DAGLISH

CAD SCALE: N/A

DRG.NO. 5020112

SHEET 1 OF 1

A3