ISSUE	DATE	AMENDMENTS
1	04/07/12	ORIGINAL
2	13/02/13	PROTOTYPE ISSUES CORRECTED - WDA
3	14/03/13	HEATERS PREVIOUSLY WIRED STAR - WDA
4	12/02/14	REGEN OHP ADDED - WDA

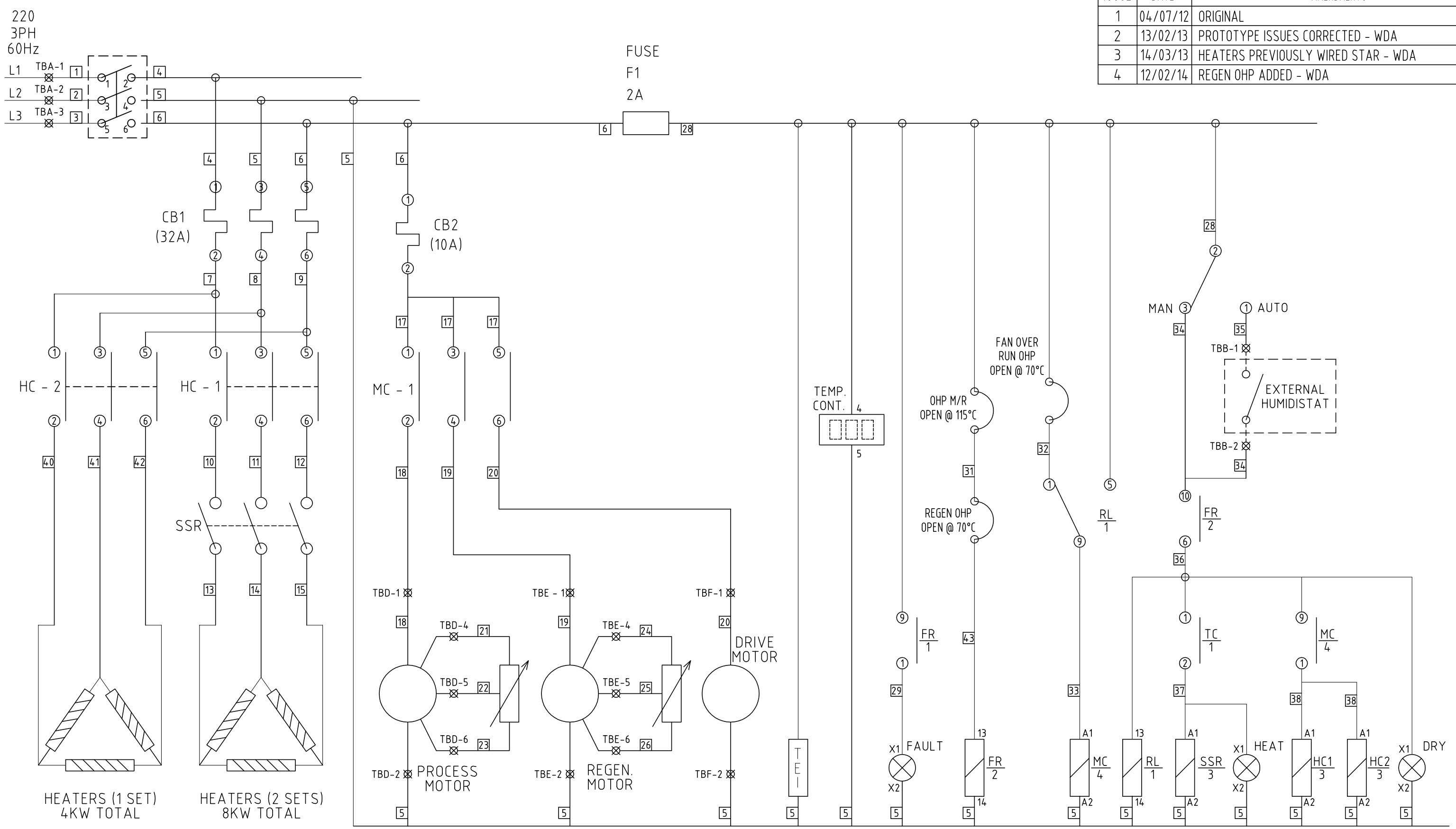

© 1993 Ebac LIMITED BISHOP AUCKLAND ENGLAND

TITLE: DD1200 - 220V/60Hz 3PH - WIRING SCHEMATIC

3RD ANGLE PROJECTION

DO NOT SCALE
IF IN DOUBT ASK

DIMENSIONS IN m.m.
TOLERANCES UNLESS OTHERWISE STATED
0. ± 1
0.0 ± 0.25
0.00 ± 0.05
ANGULAR ± 0.5 DEGREE

MATERIAL: N/A

FINISH: N/A

DRAWN: W DAGLISH

CAD SCALE: N/A

DRG.NO. 5020330

SHEET 1 OF 1

A3