ISSUE	DATE	AMENDMENTS
1	30/11/12	ORIGINAL
2	13/02/13	PROTOTYPE ISSUES CORRECTED - WDA
3	13/03/13	PILOT BUILD ISSUES INCORPORATED - WDA
4	13/02/14	REGEN OHP ADDED - WDA

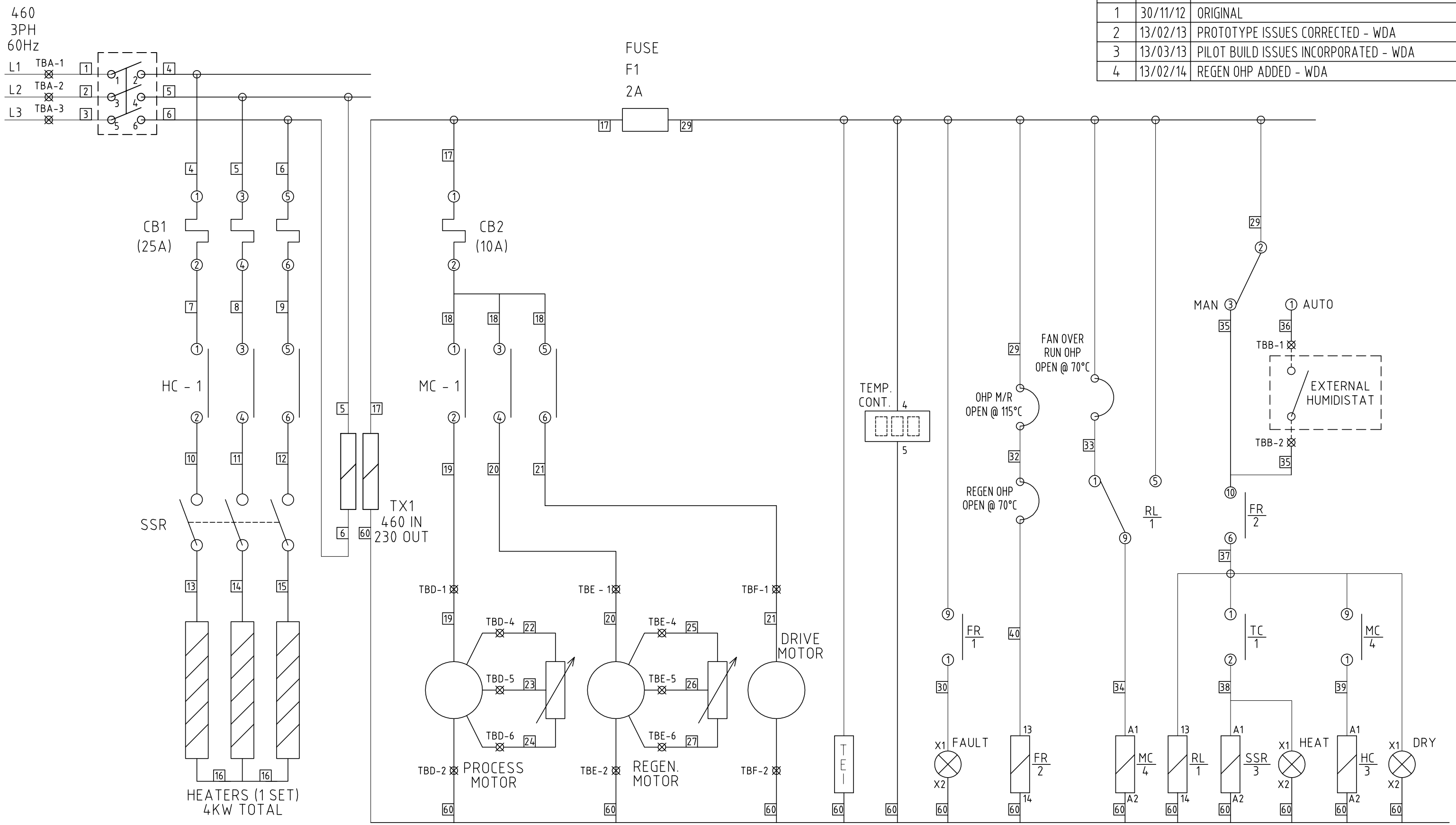

© 1993

Ebac LIMITED
BISHOP AUCKLAND
ENGLAND

TITLE
DD700 - 460V/60Hz 3PH - WIRING SCHEMATIC

3RD ANGLE PROJECTION

DO NOT SCALE
IF IN DOUBT ASK

DIMENSIONS IN m.m.
TOLERANCES UNLESS OTHERWISE STATED
0. ± 1
0.0 ± 0.25
0.00 ± 0.05
ANGULAR ± 0.5 DEGREE

MATERIAL
N/A

FINISH
N/A

DRAWN : W DAGLISH

CAD SCALE : N/A

DRG.NO.
5020357

SHEET
1 OF 1

A3