the **outdoor greatroom** company

The Cove Fire Pit

Installation Instructions for Round Cove Fire Pits

IMPORTANT

Please consult your Crystal Fire instruction manual for detailed instructions and important information related to the burner installation including: lighting and operating instructions, safety information, and proper tightening of connections with two wrenches.

DO NOT ATTEMPT TO INSTALL CRYSTAL FIRE BURNER WITHOUT FIRST CONSULTING THE CRYSTAL FIRE OWNER'S MANUAL.

Contents

Required Tools... 2

Included with your Fire Pit... 3

Assembly Instructions 4

CF-SPARKER Installation... 5

Gas Connections 5

Thermocouple Installation... 6

Electrode Installation... 6

Glass Installation... 7

CV-30-E Installation... 8

Frequently Asked Questions 10

Required Tools

- **Two people are required for this installation.**

- 2 Open Ended Wrenches

  To secure gas connections.

- Leather Gloves

  To protect hands from rough edges found on fire pit during installation.

- One AAA Battery (not included)

  Required for electric spark igniter installation.

- Utility Knife

  To cut and remove packaging.

- Power Drill

  To remove support board from crate.

Included With Your Fire Pit

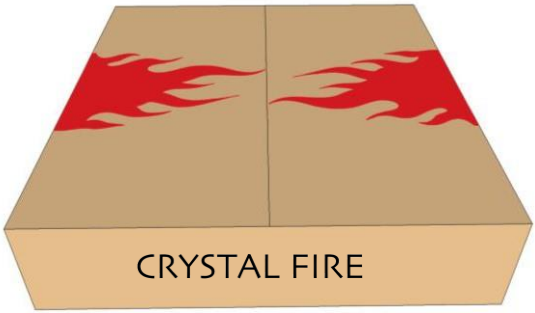

Crystal Fire® Plus (CFP) Burner Kit

Assembly Instructions

1. First, unscrew the shipping block with a power drill. Discard board. It will not be needed for further assembly of this product.
2. Remove fire pit base from the crate you received it in. Place the base in your desired location. Two people are recommended for this step of the installation.

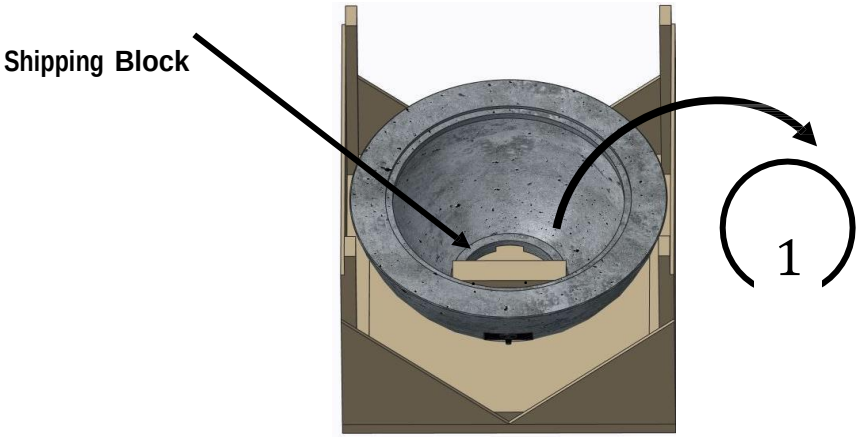

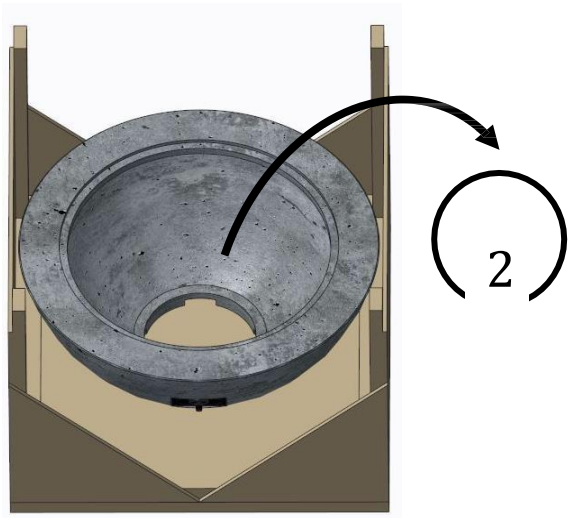

CF-SPARKER Installation

- Locate CF-SPARKER inside of crystal fire burner box.
- Remove CF-SPARKER cap and hex nut. Insert AAA battery (not included) with + end out.
- Install CF-SPARKER into control panel as shown below.
- Depress CF-SPARKER button to test your sparker.

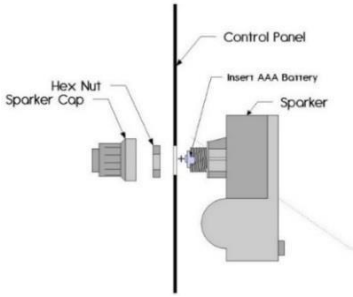

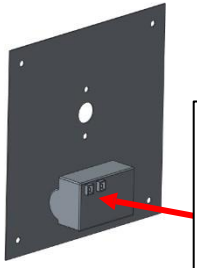

Locate and orient sparker box on control panel as shown. Sparker box must be installed **before** burner valve.

Gas Connections

Read and understand your Crystal Fire® Plus Burner Owner's manual before beginning burner hookups or using the device.
<u>Do not use Teflon tape or pipe dope on flare fittings.</u>

- **See Crystal Fire® Plus instructions for burner installation.**
  - All gas connections were completed at the factory.
- Check all connections for leaks. If needed, tighten connection with 2 wrenches and re-check for leaks.
- Attach burner valve to control panel with provided screws as shown below. Ensure sparker box is installed before this step.

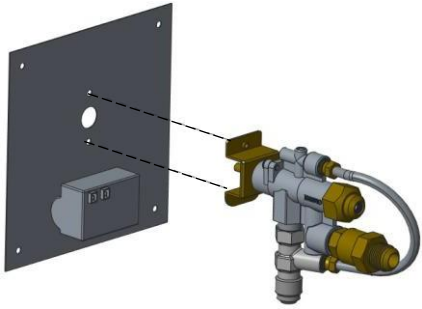

Thermocouple Installation

- **Refer to Crystal Fire® Plus instruction manual for detailed attachment of thermocouple.**
- Attach thermocouple to burner valve as shown below.

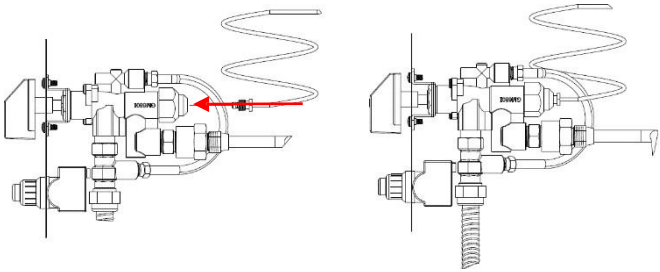

Electrode Installation

- Connect igniter and ground wire to sparker box. Both wires can connect to either connection point. The unit will operate in either configuration.

- Test system by pushing the button on the igniter. Consult the troubleshooting section of the Crystal Fire® Plus Burner Owner's Manual, if the spark is weak, intermittent, or not present.

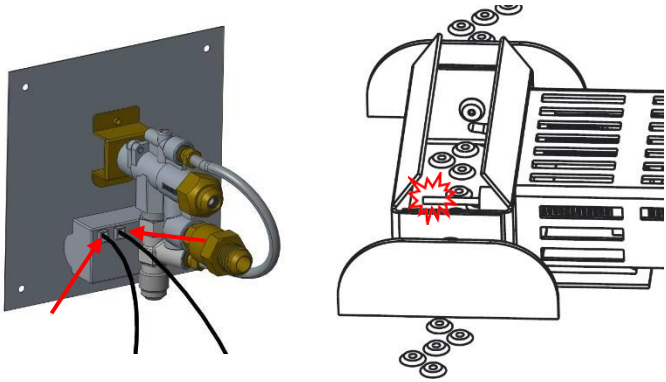

Glass Installation

1. Scatter all the included glass beads evenly onto burner surface.

DO NOT OPERATE CRYSTAL FIRE® PLUS BURNER WITHOUT INCLUDED GLASS BEADS OR OTHER APPROVED FIRE MEDIA
DO NOT OPERATE CRYSTAL FIRE® PLUS BURNER WITH BURNER COVER IN PLACE

CV-30-E Installation

- Place burner plate into Cove base.
- Remove the 4 ¼-20 stainless steel screws installed in rivnuts.
- Make gas connections.
- Ignition wind guard should be oriented towards cutout in burner plate. *As shown in detailed view.*
- Replace the 4 ¼-20 stainless steel screws back through the burner and tighten into rivnuts.

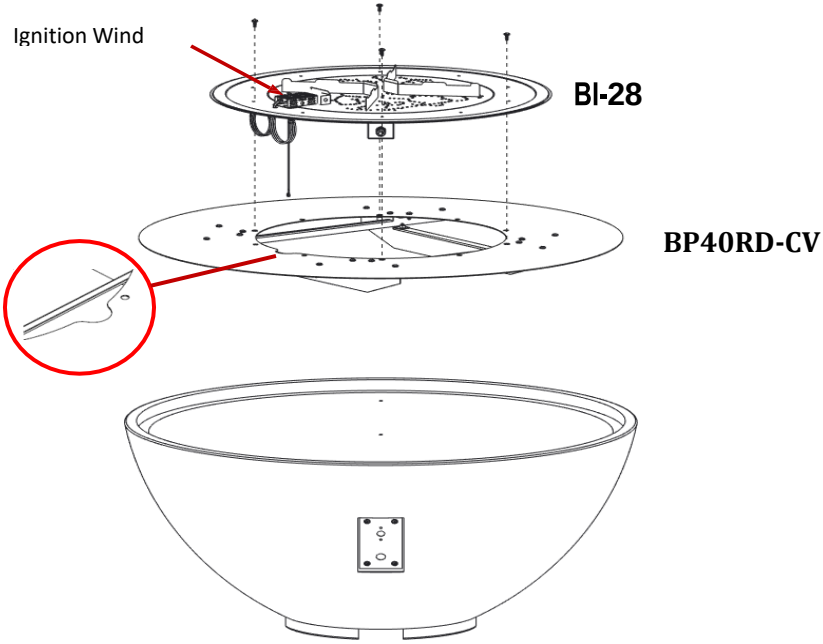

IMPORTANT

Please consult your Crystal Fire® Plus instruction manual for detailed instructions and important information related to the burner installation including: lighting and operating instructions, safety information, and proper tightening of connections with two wrenches.

DO NOT ATTEMPT TO INSTALL CRYSTAL FIRE® PLUS BURNER WITHOUT FIRST CONSULTING THE CRYSTAL FIRE® PLUS BURNER OWNER'S MANUAL.

WARNING

After consulting the manual and following instructions, remember; before operating, all gas connections must be fully checked for leaks

WARNING: This product can expose you to chemicals including Carbon Monoxide and Benzene which are known to the State of California to cause cancer or birth defects or reproductive harm. For more information, visit www.P65Warnings.ca.gov

Frequently Asked Questions

What is Supercast?

Supercast is a proprietary blend of fiber glass and polymer fortified concrete. This guide will help inform you about some unique characteristics of a Glass-Fiber reinforced concrete and help you keep it looking like new for years to come.

Supercast Glass Fiber Reinforced Concrete (GFRC) Products Warranty Information

- One year warranty on structure and finish. Cracks that exceed 1/8'' displacement in either height or gap and determined to be a product of either material or workmanship, shall be warrantied for a period of 1 year. Non-structural hairline cracks are possible and shall not be considered a manufacturing defect.
- Natural variations in color, shade, porosity, pitting and texture may occur with GFRC products and are considered inherent and valued qualities of the material. Variation in shape and dimension can be up to ± 1/4".
- Under most conditions, re-sealing is suggested every 1-2 years using a clear matte finish solvent based concrete sealer. The frequency is dependent on ambient conditions including, but not limited to: frequency of use, exposure to UV, saltwater, chlorine, hard water, air temperature, and humidity.
- If covering a GFRC item, use a one-way breathable cover as supplied by The Outdoor GreatRoom Company, LLC (OGC) or equivalent. Do not use other materials or objects in order to hold down or secure a protective cover on top or around the GFRC item.
- While maintaining a regular re-sealing maintenance schedule in com- bination with using a one-way breathable cover, the color of a GFRC item will fade minimally over time and should not require re-staining or re-coloring. If re-staining, contact OGC for an approved stain type and color.
- When used in conjunction with a Crystal Fire Plus burner setup, all custom GFRC products are required to operate with an OGC glass guard installed around the burner. The glass guard improves the flame appearance and reduces the risk of unnecessary thermal stress on the GFRC surface. A glass guard is recommended for stock GFRC products.

What makes a concrete fire pit unique?

Your fire pit is handcrafted from Portland cement concrete and reinforced with glass fibers to provide exceptional strength and durability compared to traditional concrete. Supercast is typically 1/3 of the thickness of traditional concrete with 3 times the strength. Each piece offers its own uniqueness; you may notice color variations in your fire pit. This is intentionally done during the molding process in order to create a unique natural appearance which mimics natural stone.

Maintenance Instructions:

To keep your fire pit looking new, we recommend the following:

- Keep covered when not in use to protect from buildup of water, snow, dust,

dirt, and debris and direct sunlight whenever possible.

- Do not put the cover on when the fire pit is wet.
- If any colored liquids such as wine or soda are spilled on your top, clean off immediately to avoid possible staining.
- We recommend cleaning your fire pit regularly with a mild mixture of dish detergent and warm water; rinse thoroughly.

How do I reseal Supercast surfaces?

- First clean using a diluted solution of vinegar and water to remove any dirt or debris that may have accumulated on the surface and allow to dry.
- Reseal the surfaces using SC-Sealer from The Outdoor GreatRoom Company, or a clear matte finish solvent based concrete sealer, and allow to cure for 24 hours before exposing to water or use. Follow instructions provided on the container of the sealer taking care not to over apply the sealer and causing runs or bubbles. For natural grey, the stain/sealer is available at Sherwin-Williams: H&C Exterior ColorTop solvent-based solid color concrete sealer, color is 75% Felted Wool.
- Minor surface scratches can be removed by using the re-sealing method above. Clean the area affected and apply the sealer.

Warranty: Fire pit tables are covered under a 1- year manufacturer's warranty. Please visit https://outdoorrooms.com/pages/product-support__product-registration to register your product.

Thank you for purchasing an Outdoor GreatRoom Company product!

9583 217th St. W. • Lakeville, MN 55044
Toll Free: 1-866-303-4028 • Sales@OutdoorRooms.com