THE OUTDOOR GREATROOM COMPANY

Brooks and Kenwood Fire Pit Table

Installation Instructions for the following Fire Pit Tables:
BRK-1224-19, BRK-1242-19, BRK-2424-19, BRK-1242-19-W,
KW-1224-19, KW-1242-19, KW-2424-19

IMPORTANT

Please consult your Crystal Fire instruction manual for detailed instructions and important information related to the burner installation including: lighting and operating instructions, safety information, and proper tightening of connections with two wrenches.

DO NOT ATTEMPT TO INSTALL CRYSTAL FIRE BURNER WITHOUT FIRST CONSULTING THE CRYSTAL FIRE OWNER'S MANUAL.

Contents

Required Tools.....2

Included with your Fire Pit.....3

Assembly Instructions.....4

CF-SPARKER Installation 6

Gas Connections.....7

Thermocouple Installation.....8

Electrode Installation.....8

Fire Media Installation.....9

Position Your Tank.....10

Riser Kit Installation.....11

Required Tools

- Utility Knife
  To cut and remove packaging

- 2 Open Ended Wrenches
  To secure gas connections

- Leather Gloves
  To protect hands from glass and sharp edges during install

- One AAA Battery (not included)
  Required for electric spark igniter installation

- Phillips Screwdriver
  To attach mounting screws to control panel

- **Two people are required for this installation**

Included with your Fire Pit

Bolt A [X12]

M6X20

Touch-Up Paint Bottle

[X1]

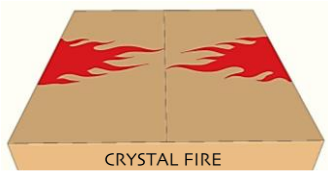

CFP Burner

Optional Riser Kit:
Required to fit 20# propane tank under table

M6 Allen Wrench [X1]

Center Support [X1]

Panel A [X1]

Panel B [X1]

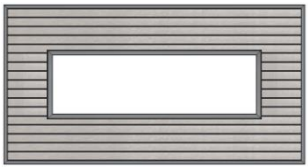

Top [X1]

Panel C [X1]

Access Door [X1]

Assembly Instructions

INSTALL NOTE: Final tightening of bolts should be completed following installation of all panels.

1. Unpack all the contents from the box and remove the individual packaging from each component.

2. Carefully lay the *Top*, with underside facing upwards, on a soft and flat surface.

3. Attach *Panel A* using *Bolt A (X2)* as shown below.

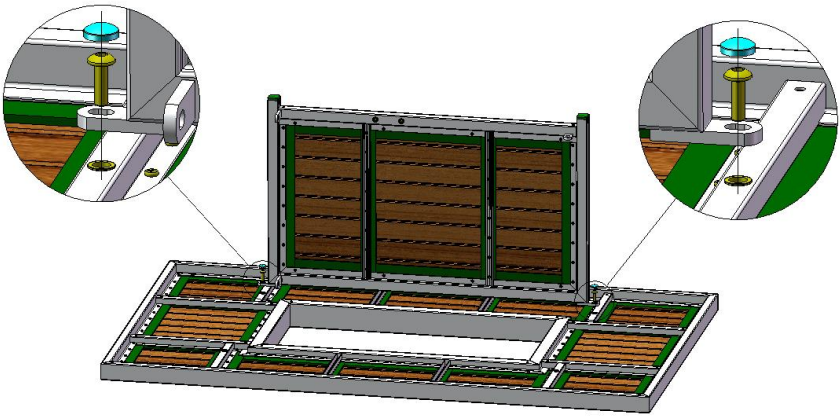

4. Attach *Panel B* on the opposite side of *Panel A* using *Bolt A (X2)* as shown below.

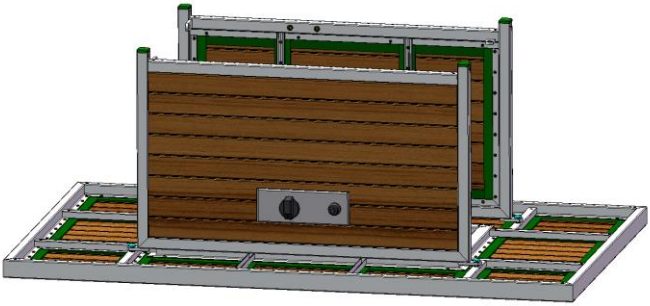

5. Attach *Panel C* using *Bolt A (X4)* as shown below.

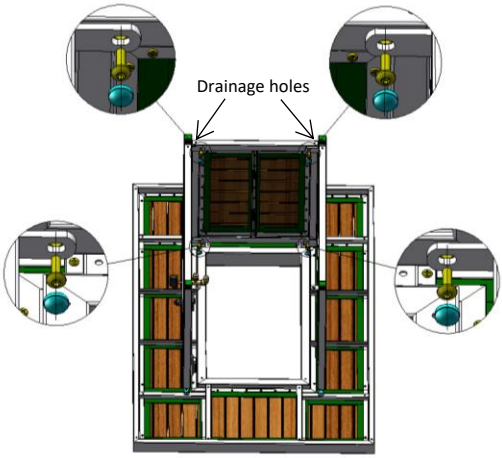

NOTE: Drainage holes on *Panel C* must be facing down towards the surface on which you will be placing your fire pit.

6. Attach *Center Support* piece, as shown below, to the bottom of the fire pit using *Bolt A (X4)*.
NOTE: Drainage holes on *Center Support* piece must be facing down towards the surface on which you will be placing your fire pit.

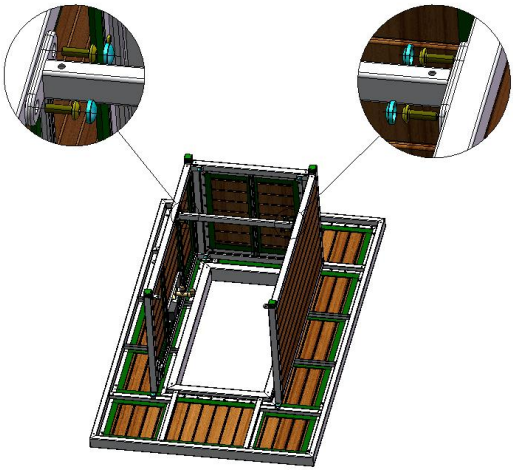

8. Do a final tightening of the bolts you have installed in your fire pit. Then, with the help of another person, turn the table right side up.

CF-SPARKER Installation

- Locate CF-SPARKER inside of Crystal Fire® Plus burner box.
- Remove CF-SPARKER cap and hex nut. Insert AAA battery (not included) with + end out.
- Install CF-SPARKER into control panel as shown below.
- Depress CF-SPARKER button to test your sparker.

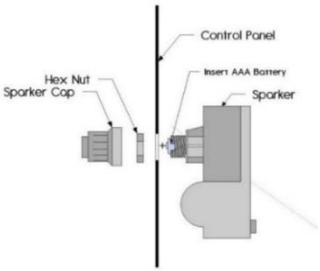

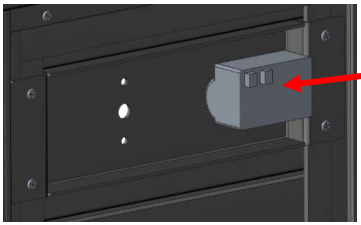

Locate and orient sparker box on control panel as shown. Sparker box must be installed **before** burner valve.

Gas Connections

Read and understand your Crystal Fire® Plus owner's manual before beginning burner hookups or using the device.
Do not use Teflon tape or pipe dope on flare fittings.

- **See Crystal Fire® Plus instructions for burner installation.**
    - All gas connections were completed at the factory.
- Check all connections for leaks. If needed, tighten connection with 2 wrenches and re-check for leaks.
- Attach burner valve to control panel with provided screws as shown below. Ensure sparker box is installed before this step.

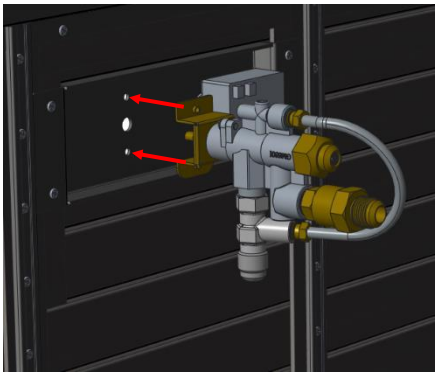

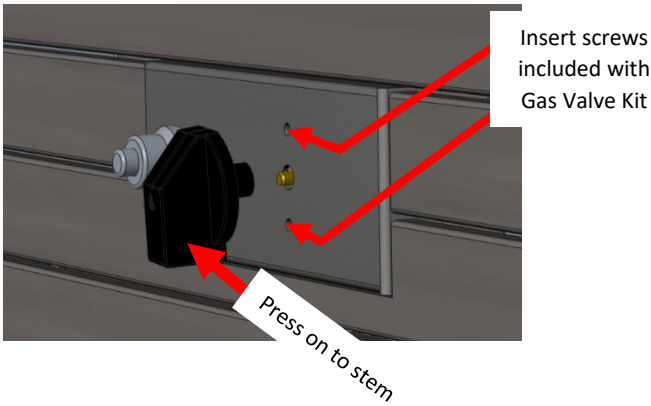

Thermocouple Installation

- **Refer to Crystal Fire® Plus instruction manual for detailed attachment of thermocouple.**
- Attach thermocouple to burner valve as shown below.

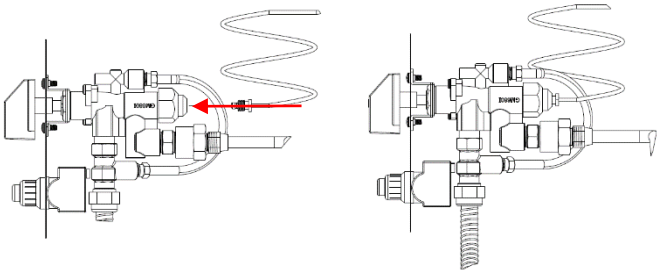

Electrode Installation

- Connect igniter and ground wire to sparker box. Both wires can connect to either connection point. The unit will operate in either configuration.
- Test system by pushing the button on the igniter. Consult the troubleshooting section of the Crystal Fire® Plus Burner Owner's Manual, if the spark is weak, intermittent, or not present.

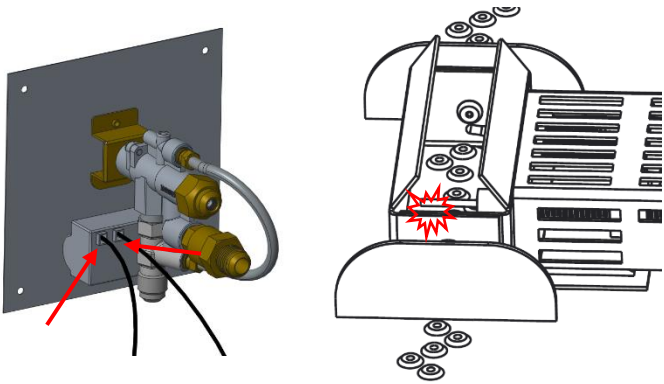

Fire Media Installation

- Scatter all included glass beads, lava rock, or other approved fire media evenly across entire burner surface.

DO NOT OPERATE CRYSTAL FIRE® PLUS BURNER WITHOUT INCLUDED GLASS BEADS OR OTHER APPROVED FIRE MEDIA
DO NOT OPERATE CRYSTAL FIRE® BURNER WITH BURNER COVER IN PLACE

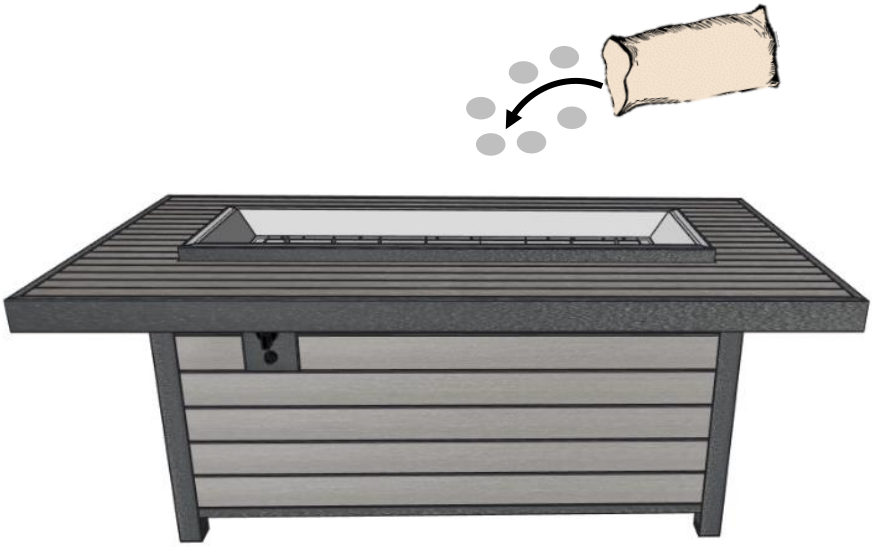

After installing CF-SPARKER and making gas connections, verify that all connections are tight and that no leaks are present using a solution of soapy water or a commercially available leak-check solution.

Position Your Tank (if applicable)

1. Connect the propane hose/regulator to the propane tank and hand tighten (DO NOT USE A WRENCH) and slide the propane tank past the dotted line to ensure the *Access Door* closes properly. Attach the *Access Door*.
2. With the tank inside, ensure that no hoses, wires, or any other components are kinked or touching the burner pan.

Riser Kit Installation

HAND-TIGHTEN ONLY. DO NOT USE TOOLS TO TIGHTEN THE RISER KIT HARDWARE.

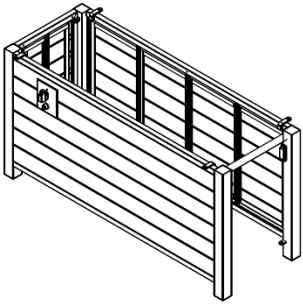

1. **Assemble base according to Manual included with table**

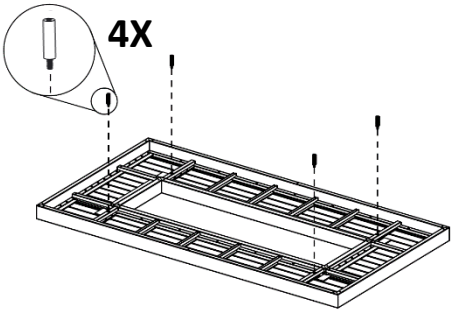

2. **Screw (4) spacers into threads on the underside of the table surface**

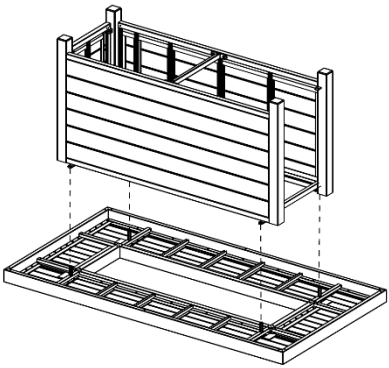

3. **Place base, upside-down, onto spacers**

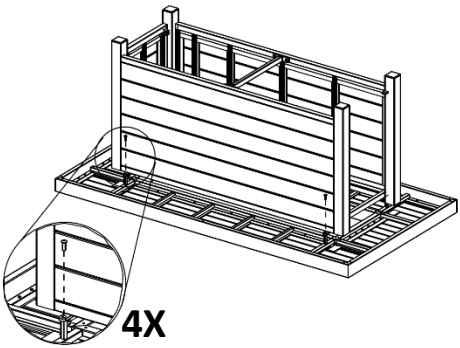

4. **Secure base to spacers using 4 screws (included with table packaging). Do not overtighten.**

IMPORTANT

Please consult your Crystal Fire® Plus instruction manual for detailed instructions and important information related to the burner installation including: lighting and operating instructions, safety information, and proper tightening of connections with two wrenches.

DO NOT ATTEMPT TO INSTALL CRYSTAL FIRE® PLUS BURNER WITHOUT FIRST CONSULTING THE CRYSTAL FIRE® PLUS OWNER'S MANUAL.

WARNING

After consulting the manual and following instructions, remember; before operating, all gas connections must be fully checked for leaks

Warranty: Fire pit tables are covered under a 3- year manufacturer's warranty. Please visit https://www.outdoorrooms.com/product-registration to register your product.

WARNING: This product can expose you to chemicals including Carbon Monoxide and Benzene which are known to the State of California to cause cancer or birth defects or reproductive harm. For more information, visit www.P65Warnings.ca.gov

Care and maintenance note:

Light scratches may be removed from the poly-wood surfaces of this fire pit by gently sanding with 220-grit sandpaper in the same direction as the grain. Sanding too deeply or not following the grain of the material could result in permanent damage.

9583 217th St. W. • Lakeville, MN 55044
Toll Free: 1-866-303-4028 • Sales@OutdoorRooms.com