THE OUTDOOR GREATROOM COMPANY

Cedar Ridge Fire Pit Table

Installation Instructions for Cedar Ridge Fire Pit Table
CR-1242-K

IMPORTANT

Please consult your Crystal Fire instruction manual for detailed instructions and important information related to the burner installation including: lighting and operating instructions, safety information, and proper tightening of connections with two wrenches.

DO NOT ATTEMPT TO INSTALL CF-1242 BURNER WITHOUT FIRST CONSULTING THE CRYSTAL FIRE OWNER'S MANUAL.

Contents

Required Tools.....2

Included with your Fire Pit.....3

Assembly Instructions.....4

Gas Connections.....7

Igniter Installation.....9

Glass Installation.....10

Position Your Tank.....11

Required Tools

- Utility Knife
  To cut and remove packaging

- 2 Open Ended Wrenches
  To secure gas connections

- Leather Gloves
  To protect hands from glass and sharp edges during install

- One AAA Battery (not included)
  Required for electric spark igniter installation

- Phillips Screwdriver
  To attach mounting screws to control panel

- **Two people are required for this installation**

Included with your Fire Pit

M6 Allen Wrench [X 1]

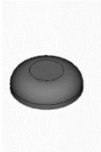

Bolt Caps [X 4]

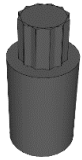

Touch-up Paint [X 1]

CFP Burner

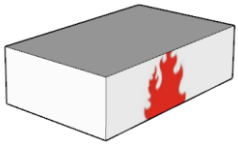

Bolt A [X 4]

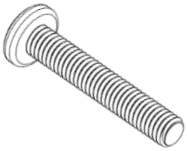

M6X35

Bolt B [X 4]

M6X20

Center Support [X 1]

Panel B [X 1]

Panel C [X 1]

Panel A [X 1]

Supercast Top

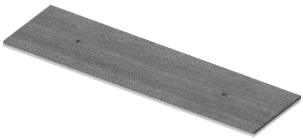

Supercast Burner Cover

Access Door [X 1]

Assembly Instructions

1. Unpack the fire pit table contents from the box, and remove individual packaging from each piece.
2. Lay *Panel A* on soft, flat surface.
3. Position *Center Support* on *Panel A*.
   NOTE: it is very important to place the *Center Support* exactly as shown in the picture below. This will ensure that your burner (and propane tank, if applicable) will fit correctly with your fire pit table base. (Refer to "Included with Your Fire Pit" for component details).

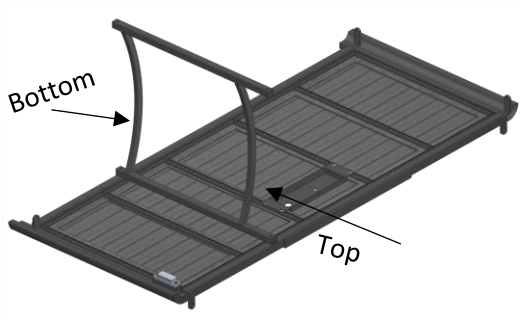

NOTE: curve facing inward toward Control Panel.

4. Attach *Center Support* with *Bolt A (x2)*.

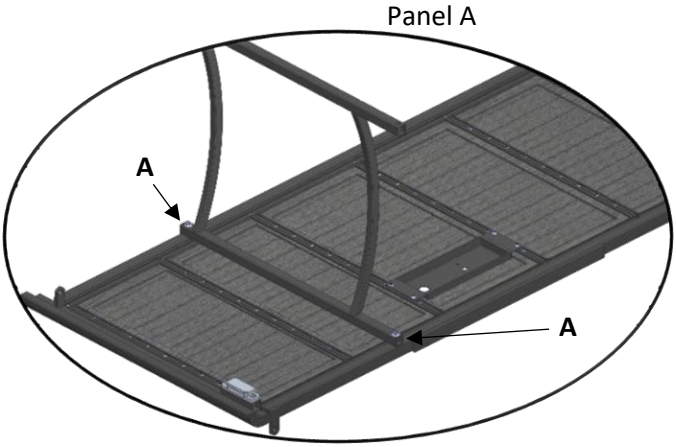

4. Stand up *Panel A* and use 2 more *Bolt A* to attach *Center Support* to *Panel B*.

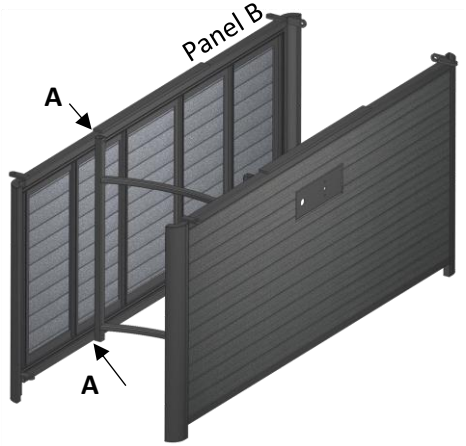

5. Use *Bolt B (x4)* to attach *Panel C* as shown.

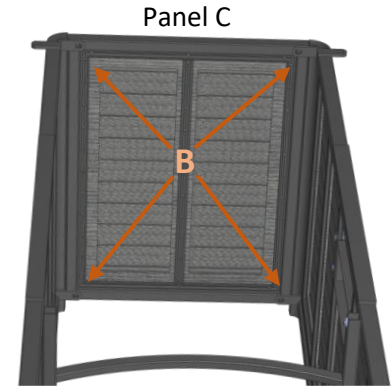

6. Attach *Access Door*.

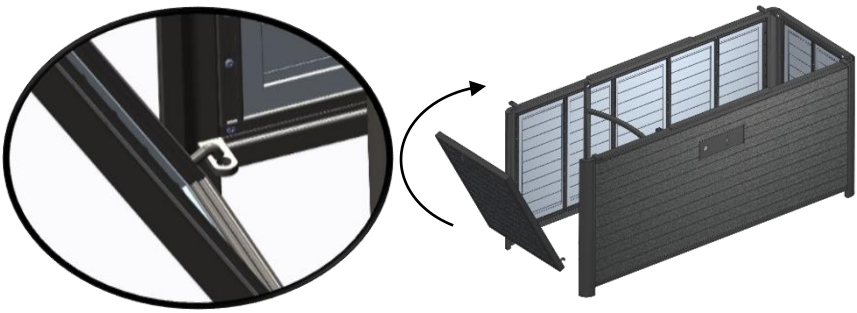

8. Set *Supercast Top* directly onto base as shown below.

CF-SPARKER Installation

- Locate CF-SPARKER inside of Crystal Fire® Plus burner box.
- Remove CF-SPARKER cap and hex nut. Insert AAA battery (not included) with + end out.
- Install CF-SPARKER into control panel as shown below.
- Depress CF-SPARKER button to test your sparker.

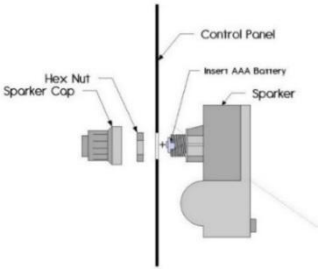

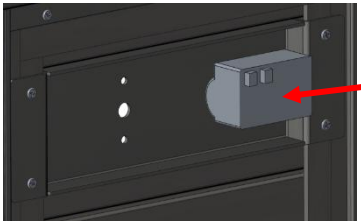

Locate and orient sparker box on control panel as shown. Sparker box must be installed **before** burner valve.

Gas Connections

Read and understand your Crystal Fire® Plus owner's manual before beginning burner hookups or using the device.
Do not use Teflon tape or pipe dope on flare fittings.

- **See Crystal Fire® Plus instructions for burner installation.**
    - All gas connections were completed at the factory.
- Check all connections for leaks. If needed, tighten connection with 2 wrenches and re-check for leaks.
- Attach burner valve to control panel with provided screws as shown below. Ensure sparker box is installed before this step.

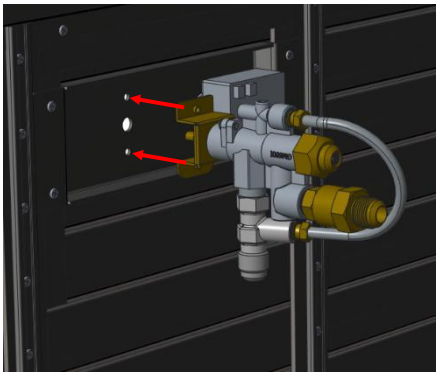

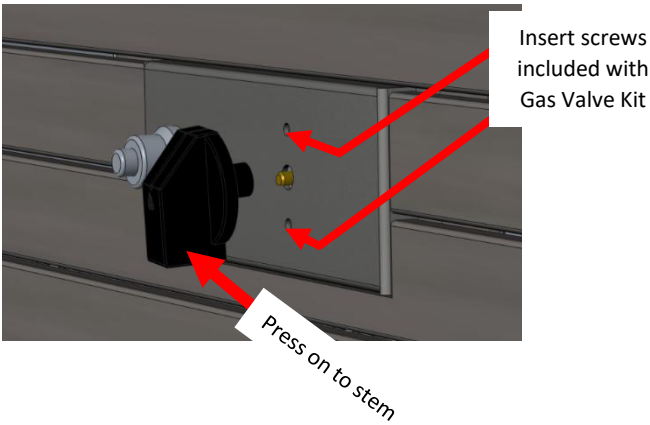

Thermocouple Installation

- **Refer to Crystal Fire® Plus instruction manual for detailed attachment of thermocouple.**
- Attach thermocouple to burner valve as shown below.

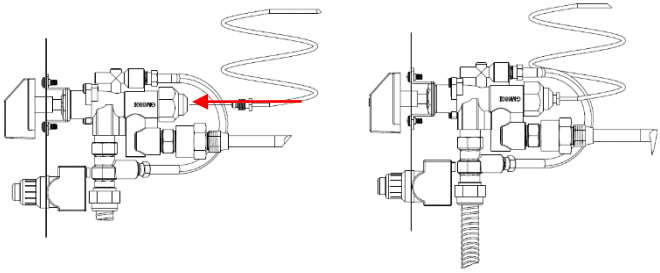

Electrode Installation

- Connect igniter and ground wire to sparker box. Both wires can connect to either connection point. The unit will operate in either configuration.
- Test system by pushing the button on the igniter. Consult the troubleshooting section of the Crystal Fire® Plus Burner Owner's Manual, if the spark is weak, intermittent, or not present.

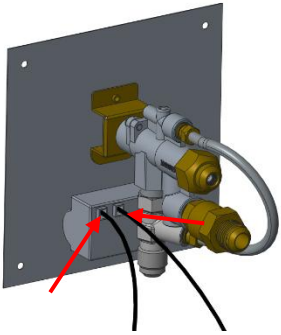

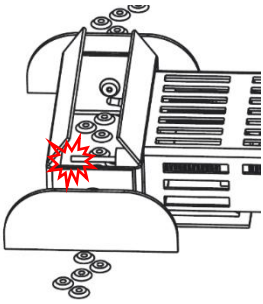

Glass Installation

1. Scatter all of the included *Glass Beads* evenly onto burner surface.
   DO NOT OPERATE CRYSTAL FIRE® PLUS BURNER WITHOUT GLASS BEADS OR OTHER DECORATIVE MEDIA PRESENT

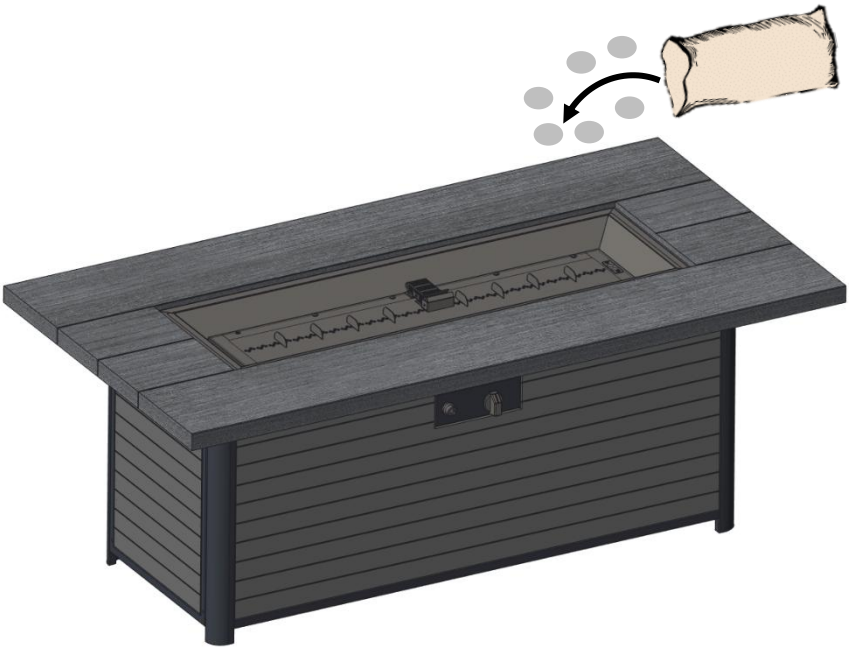

DO NOT OPERATE CRYSTAL FIRE® PLUS BURNER WITH SUPERCAST BURNER COVER IN PLACE

After installing igniter and making gas connections, verify that all connections are tight and that no leaks are present using a solution of soapy water or a commercially available leak-check solution.

Position Your Tank (if applicable)

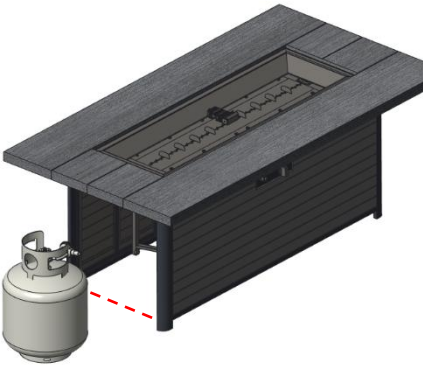

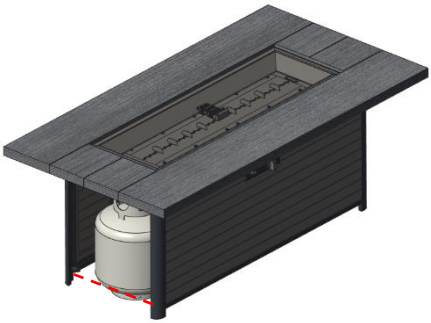

1. Remove door, connect the propane hose/regulator to the propane tank and hand tighten (DO NOT USE A WRENCH) and slide the propane tank past the dotted line to ensure the door closes properly.
2. With the tank inside, ensure that no hoses, wires, or any other components are kinked or touching the burner pan.

Care and maintenance note:

Light scratches may be removed from the poly-wood surfaces of this fire pit by gently sanding with 220-grit sandpaper in the same direction as the grain. Sanding too deeply or not following the grain of the material could result in permanent damage.

IMPORTANT

Please consult your Crystal Fire® Plus instruction manual for detailed instructions and important information related to the burner installation including: lighting and operating instructions, safety information, and proper tightening of connections with two wrenches.

DO NOT ATTEMPT TO INSTALL CRYSTAL FIRE® PLUS BURNER WITHOUT FIRST CONSULTING THE CRYSTAL FIRE® PLUS OWNER'S MANUAL.

WARNING

After consulting the manual and following instructions, remember; before operating, all gas connections must be fully checked for leaks

WARNING: This product can expose you to chemicals including Carbon Monoxide and Benzene which are known to the State of California to cause cancer or birth defects or reproductive harm. For more information, visit www.P65Warnings.ca.gov

Warranty: Fire pit tables are covered under a 3-year manufacturer's warranty. Supercast concrete tops are covered under a 1-year warranty. Please visit https://www.outdoorrooms.com/product-registration to register your product.

9583 217th St. W. • Lakeville, MN 55044
Toll Free: 1-866-303-4028 • Sales@OutdoorRooms.com